SPECIFICATION

產品規格書

產品名稱 / Model Name：R2A-460D1V2

版本 / Revision：1.1

產品描述 / Description：460W+460W Redundant Power Supply.

修改紀錄 / Revision History

版本 Rev.	日期 Date	版本描述 Revision Description	修改者 Modify By	客戶認可 Cust. Approval	認可日期 App. Date
1.0	AUG.08 2011	背板 DC-DC 線路調整 Modified the circuit for DC-DC backplane	Kevin Chen		AUG.10, 2011
1.1	Jan. 09 2012	Modified the 6.3 value.	Jacky Jan		Jan. 09, 2012

提交 / Prepared BY	檢查 / Checked BY	批准 / Approved BY
	KEVIN	JACKY

目錄 Contents

1. 概述 General Description
2. 輸入規格 Input Characteristics
2.1. 交流輸入電壓和頻率範圍 AC Input voltage and frequency
2.2. 輸入電流與浪湧電流 Input current and inrush current
2.3. 功率因數 Power Factor
3. 效率 Power Efficiency
4. 輸出規格 Output Characteristics
4.1. 輸出電壓電流調整率 Output Voltage & Current Regulation
4.2. 輸出紋波和噪音 DC Output Ripple & Noise
4.3. 輸出保持時間 Hold Up Time
4.4. 上升時間 Rise Time
4.5. 動態響應時間 Dynamic load response time
4.6. 遠端開關控制 Remote on/off control
5. 電源良好信號 Power good signal
6. 保護 PROTECTION
6.1. 過壓保護 Over voltage protection
6.2. 低壓保護 Under-voltage protection
6.3. 過流保護 Over current Protection
6.4. 短路保護 Short circuit protection
6.5. 過熱保護 Thermal Protection
7. 電源信號狀態 Power System Signal status
7.1. 蜂鳴器狀態 Buzzer status
7.2. 燈號指示 LED indicators
7.3. TTL信號 TTL signal
8. 負載均流 Load sharing

9. 絕緣性能 Isolation

9.1. 絕緣電阻 Insulation Resistance

9.2. 耐壓絕緣 Dielectric Withstand Voltage

9.3. 漏電電流 Leakage current

10. 安全要求 Safety Requirements

11. 電磁相容 EMC

11.1. 電磁干擾 EMI

11.2. 電磁相容 EMS

12. 環境條件Environmental

12.1. 溫度 Temperature

12.2. 環境濕度 Humidity

12.3. 海拔高度 Altitude

12.4. 振動耐受 Vibration

12.5. 衝擊耐受 Shock

12.6. 冷卻方式 Cooling Method

13. 可靠性 Reliability

13.1平均故障失效時間 MTBF Qualification

14. 機械尺寸和電源連接器 Mechanical 2D Drawing and Power Connector

14.1. 外觀尺寸圖 Outside Dimension

14.2. 輸出端線材 DC Output cables

1. 概述 General Description

This specification describes the performance characteristics of a 460 watts hot swappable, 1+1 power system with +3.3V,+5V,+12V, -12V main DC outputs, and 5V standby outputs. The system is configured to hold two identical 460W power supply modules, ***SURE STAR*** Model R2A-460D1V2.

2. 輸入規格 Input Characteristics

2.1. 交流輸入電壓和頻率範圍 AC Input voltage and frequency

最小值 Minimum	正常值 Nominal	最大值 Maximum	單位 Unit
90	100~240	264	伏特 VAC
47	50~60	63	赫茲 Hz

2.2. 輸入電流與浪湧電流 Input current and inrush current

交流輸入電壓 AC Input Voltage	最大輸入電流 MAX. Input Current per power supply module	浪湧電流 Inrush Current per power supply module
115Vac	10A	25A
230Vac	5A	50A

2.3. 功率因數 Power Factor

90Vac	115Vac	230Vac	264Vac
＞0.99	＞0.98	＞0.95	＞0.92

3. 效率 Power Efficiency

在滿載狀態，115 伏特 60 赫茲輸入下，電源效率爲 80%(Min)。

The Minimum efficiency of the power supply is 80% at full load and 115Vac/60HZ input.

4. 輸出規格 Output Characteristics

4.1. 輸出電壓電流調整率 Output Voltage & Current Regulation

輸出電壓 Output Voltage	最小電流 Min. Current	額定電流 Rated current	調整率 REGULATION
+3.3V	1A	25A	±5%
+5V	1A	25A	±5%
+12V	1A	36A	±5%
-12V	0A	1A	±5%
+5VSB	0.5A	3A	±5%

Note: 5V 和 3.3V 相加總不可超過 170 瓦.

The combined total power from 5V & 3.3V shall not exceed 170W.

4.2. 輸出紋波和噪音 DC Output Ripple & Noise

Output Voltage	Ripple & Noise (Max.)
+3.3V	60mVp-p
+5V	60mVp-p
+12V	120mVp-p
-12V	120mVp-p
+5VSB	50mVp-p

Note:

1. 紋波和噪音頻寬設置在 20 兆赫茲。
   Ripple & Noise bandwidth is set to 20MHz。

2. 輸出端並聯一個 0.1 uF 陶瓷電容和一個 10 uF 電解電容，測試紋波和噪音。
   Use a 0.1uF ceramic capacitor in parallel with a 10uF electrolytic capacitor at output connector terminals for ripple & noise measurements。

4.3. 輸出保持時間 Hold Up Time

Output Voltage	115VAC Input	230VAC Input
+3.3V	＞16ms	＞16ms
+5V	＞16ms	＞16ms
+12V	＞16ms	＞16ms
-12V	＞16ms	＞16ms
+5VSB	＞16ms	＞16ms

Note: 所有輸出在滿載狀態 All of dc output at full load.。

4.4. 上升時間 Rise Time

Output Voltage	115/230Vac Input & Full Load
+3.3V	20ms (max.)
+5V	20ms (max.)
+12V	20ms (max.)
-12V	20ms (max.)
+5VSB	20ms (max.)

Note: 上升時間爲輸出電壓從10%上升至90%的時間。

The rise time measured is when the output voltages rise from10% to 90% of specified output voltage Vout observed on the channel waveform.

4.5. 動態響應時間 Dynamic load response time

The following shall apply to the 3.3 V, 5 V, and 12 V outputs:

Output voltage for each output shall recover to within 5 % of its steady state level in less than 1 ms under the following conditions:

AC Input Voltage: 90VAC ~ 264VAC			
Repetition rate of 100Hz with 50 % duty cycle			
Output	Step Load Size	Load Slew Rate	Capacitive Load
+3.3V	30% to 100% to 30% load	0.5 A/u sec	6000uF
+5V	30% to 100% to 30% load	0.5 A/u sec	6000uF
+12V	60% to 100% to 60% load	1 A/u sec	6000uf
+5SB	0% to 100% to 0% load	0.5 A/u sec	350uF

4.6. 遠端開關控制 Remote on/off control

The main outputs of this power supply (3.3V,5V,12V,-12V) shall be energized when input signal*PSON is active. *PSON is an active low TTL compatible signal referenced to the +5V standby common. This input signal shall be an open collector signal capable of sinking a minimum of 1.6mA. When *PSON becomes inactive, the main outputs shall be disabled.

	PSU on	PSU off
PSON Signal	LOW (0.8V max)	HI (2V max)

5. 電源良好信號 Power good signal

The system shall have an active high TTL compatible signal capable of sinking 1mA and sourcing 100uA. The signal shall become active within 100 to 500 ms from the instant +5V output reaches a steady state level within the specified regulation limits. It shall become inactive at least 1 ms before +5V drops to below the lower regulation limit.

Power good @ 115/230VAC , Full Load	200ms ~ 500ms
Power Fail @ 115/230VAC , Full Load	1ms (Min.)

6. 保護 Protection

6.1. 過壓保護 Over voltage protection

Output	Min	Max	Comments
+3.3V	3.75V	4.3V	PSU shutdown
+5V	5.7V	6.9V	PSU shutdown
+12V	13V	14.3V	PSU shutdown

Note：應該在最大交流輸入電壓230伏和輕載、空載下測試。

The power supply shall be test at max AC voltage (230Vac) and min load or no load.

6.2. 低壓保護 Under-voltage protection

Output	Min	Max	Comments
+3.3V	2.0V	2.4V	PSU shutdown
+5V	3.3V	3.7V	PSU shutdown
+12V	8.5V	9.5V	PSU shutdown

Note：應該在最大交流輸入電壓230伏和輕載、空載下測試。

The power supply shall be test at max AC voltage (230Vac) and min load or no load.

6.3. 過流保護 Over current protection

Output	Over Current(Type)	Over Current(Max.)	Comments
+3.3V	≧27.5A	37.5A	PSU shutdown
+5V	≧27.5A	37.5A	PSU shutdown
+12V	≧39.6A	54A	PSU shutdown

Note：過流保護測試是在其他額定負載時測試。

The over current protection should be tested at other load rating.

6.4. 短路保護 Short circuit protection

Output	Comments
+3.3V	PSU shutdown
+5V	PSU shutdown
+12V	PSU shutdown

Note：短路保護測試是在其他額定負載時測試。

The Short circuit protection should be tested at other load rating.

6.5. 過熱保護 Thermal Protection

當外殼溫度超過86℃（±5℃），電源將進入過熱保護狀態。當溫度恢復正常，而且電源重新啓動之後，可以恢復操作。

The power supply shall go into thermal protection as the case temperature exceeds 86℃ （±5℃） limit. The output shall recover only when the temperature becomes normal and AC power is turned on again.

7. 電源信號狀態 Power System Signal status

7.1. 蜂鳴器狀態 Buzzer status

Power Supply Condition	Buzzer status
No AC power to all PSU	OFF
AC present/Only Standby Output On	OFF
Power supply DC outputs ON and OK	OFF
Power supply failure	Beeping

7.2. 燈號指示 LED indicators

Power Supply Condition	Power system status		Per Power Module status
LED Color	RED	GREEN	ORANGE
No AC power to all PSU	OFF	OFF	OFF
AC present/Only Standby Output On	ON	OFF	OFF
Power supply DC outputs ON and OK	OFF	ON	ON
Power supply failure	OFF	Blinking	OFF

7.3. TTL 信號 TTL signal

POWER SUPPLY CONDITION	OUTPUT CONDITION	
	Min.	Max.
NORMAL(POWER SUPPLY ON)	3V	5.25V
FAILURE(POWER SUPPLY OFF)	0V	1V

8. 負載均流 Load sharing

輸出電壓 Output Voltage	負載電流 Load Current	負載均流電壓 Load Share Voltage
+12V	1A	+0.48V ~ +0.52V
+5V	1A	+0.33V ~ +0.37V
+3.3V	1A	+0.33V ~ +0.37V

9. 絕緣性能 Isolation

9.1. 絕緣電阻 Insulation Resistance

Input To Output	500Vdc , 50M ohms Min.(at room Temperature)
Input To FG	500Vdc , 50M ohms Min.(at room Temperature)
Output To FG	Non Insulation

9.2. 耐壓絕緣 Dielectric Withstand Voltage

Input To Output	1834Vac (30 mA) for 1 Minute.
Input To FG	1834Vac (30 mA) for 1 Minute.
Output To FG	Non Insulation

9.3. 漏電電流 Leakage current

在120-264 伏特/50-60 赫茲情況下，最大漏電流爲3.5mA。

3.5mA max. at 120~264Vac/50~60HZ.

10. 安全要求 Safety Requirements

-IEC 60950-1

-TUV EN 60950-1

-UL or cUL

-BSMI

-CCC

11. 電磁相容 EMC

電源電磁干擾滿足以下標準

The power supply shall comply with the following criterion:

1) Conduction Emission:（傳導干擾度）

A.EN55022:2006/A1:2007 CLASS A; EN55024:1998/A1:2001/A2:20003.

B.CISPR PUB.22 and FCC PART 15 SUBPART B CLASS A.

2) Radiated Emission :（幅射干擾度）

A.EN55022:2006/A1:2007 CLASS A; EN55024:1998/A1:2001/A2:20003.

B.CISPR PUB.22 and FCC PART 15 SUBPART B CLASS A.　B

12. 環境條件Environmental

12.1. Temperature

Operating : 0℃to +40℃

Non Operating: -20℃to +70℃

12.2. Humidity

Operating : 5% to 95%, non-condensing

Non Operating: 20% to 90%,non-condensing

12.3. Altitude

Operating: sea level to 7,000 feet

Non-operating: sea level to 40,000 feet

12.4. 振動耐受 Vibration

10-55Hz, 19.6m/s²(2G), 3minutes period, 60minutes each along X, Y and Z axis.

12.5. 衝擊耐受 Shock

49m/s²(5G),11ms, once each X, Y and Z axis.

12.6. 冷卻方式 Cooling Method

BY BALL BEARING DC FAN.

13. 可靠性 Reliability

13.1 平均故障失效時間 MTBF Qualification

Using MIL - HDBK -217F the calculated MTBF＞100,000 hours at 25℃

14. 機械尺寸和電源連接器 Mechanical 2D Drawing and Power Connector

14.1. Outside Dimension:265(D)x101(W)x84(H)mm

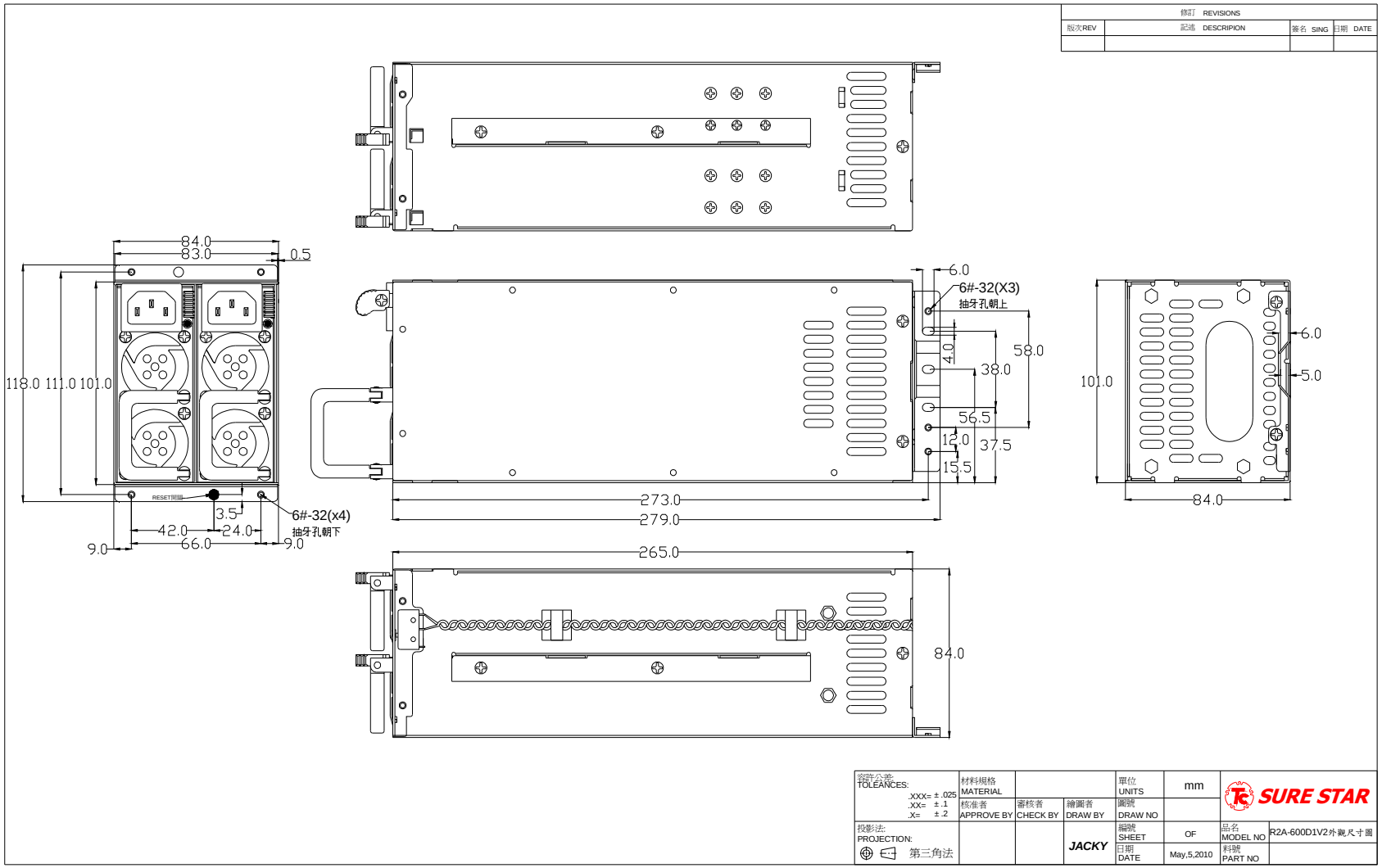

14.2. DC Output cables

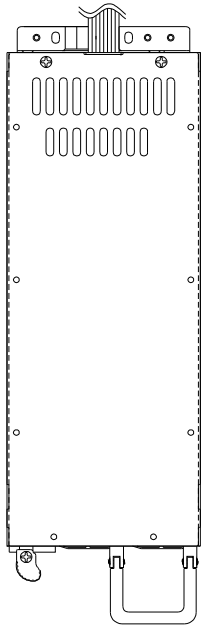

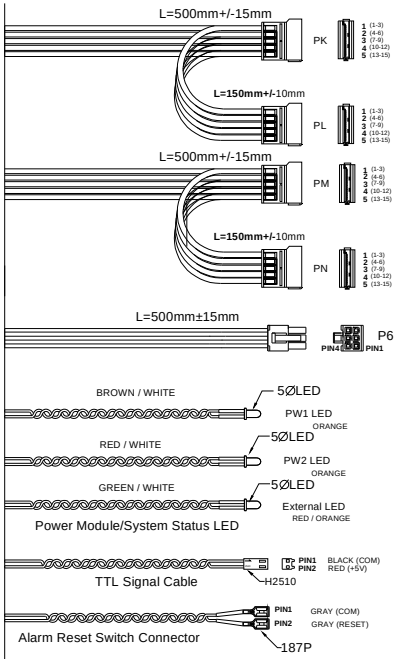

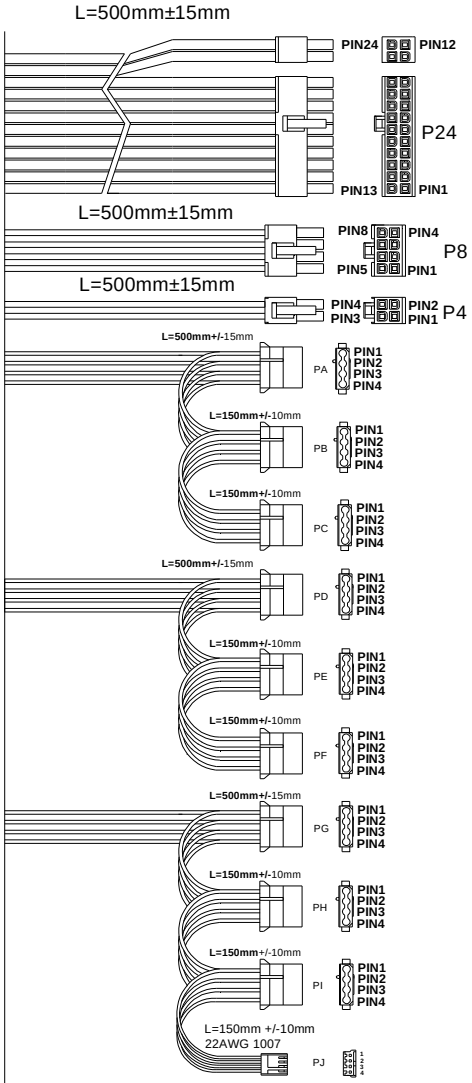

REVISIONS			
REV	DESCRIPTION	SIGN	DATE
01			/ /

24Pins(EPS12V)
Connector HOUSING: MOLEX 39-01-2240 or equivalent
TERMINAL: MOLEX 39-00-0039 or equivalent

Housing	Pin No.	WIRE COLOR	LENGTH	Pin No.	WIRE COLOR	LENGTH
P24	1	ORANGE(+3.3V)	500mm/18AWG	13	ORANGE(+3.3V) ORANGE(+3.3V)	500mm/18AWG 500mm/22AWG
	2	ORANGE(+3.3V)	500mm/18AWG	14	BLUE(-12V)	500mm/18AWG
	3	BLACK(GND)	500mm/18AWG	15	BLACK(GND)	500mm/18AWG
	4	RED(+5V)	500mm/18AWG	16	GREEN(PS-ON)	500mm/20AWG
	5	BLACK(GND)	500mm/18AWG	17	BLACK(GND)	500mm/18AWG
	6	RED(+5V)	500mm/18AWG	18	BLACK(GND)	500mm/18AWG
	7	BLACK(GND)	500mm/18AWG	19	BLACK(GND)	500mm/18AWG
	8	GRAY(PG)	500mm/20AWG	20	NC	
	9	PURPLE(+5VSB)	500mm/18AWG	21	RED(+5V)	500mm/18AWG
	10	YELLOW(+12V)	500mm/18AWG	22	RED(+5V)	500mm/18AWG
	11	YELLOW(+12V)	500mm/18AWG	23	RED(+5V)	500mm/18AWG
	12	ORANGE(+3.3V)	500mm/18AWG	24	BLACK(GND)	500mm/18AWG

8Pins(EPS12V)
Connector HOUSING: MOLEX 39-01-0280 or equivalent
TERMINAL: MOLEX 39-00-0060 or equivalent

Housing	Pin No.	WIRE COLOR	SIGNAL	WIRE TYPE	LENGTH
P8	1	BLACK	COM	18AWG	500mm ±15mm
	2	BLACK	COM	18AWG	
	3	BLACK	COM	18AWG	
	4	BLACK	COM	18AWG	
	5	YELLOW	+12V	18AWG	
	6	YELLOW	+12V	18AWG	
	7	YELLOW	+12V	18AWG	
	8	YELLOW	+12V	18AWG	

4Pins(ATX12V,FOR P4)
Connector HOUSING: MOLEX 39-01-0280 or equivalent
TERMINAL: MOLEX 39-00-0060 or equivalent

Housing	Pin No.	WIRE COLOR	SIGNAL	WIRE TYPE	LENGTH
P4	1	BLACK	COM	18AWG	500mm ±15mm
	2	BLACK	COM	18AWG	
	3	YELLOW	+12V	18AWG	
	4	YELLOW	+12V	18AWG	

4Pins(HD/CD-ROM/RW):P4H1~P4H4
Connector HOUSING: AMP 480424-0 or equivalent
TERMINAL:AMP 60619-4 or equivalent
4Pins(FLOPPY DISK):P4F
Connector HOUSING: AMP 171822-4 or equivalent
TERMINAL: AMP 170262-2 or equivalent

Housing	Pin No.	WIRE COLOR	SIGNAL	WIRE SIZE	LENGTH
PA PD PG	1	YELLOW	+12V	18AWG	500mm ±15mm
	2	BLACK	COM	18AWG	
	3	BLACK	COM	18AWG	
	4	RED	+5V	18AWG	
PB PE PH	1	YELLOW	+12V	18AWG	150mm ±15mm
	2	BLACK	COM	18AWG	
	3	BLACK	COM	18AWG	
	4	RED	+5V	18AWG	
PC PF PI	1	YELLOW	+12V	18AWG	150mm ±15mm
	2	BLACK	COM	18AWG	
	3	BLACK	COM	18AWG	
	4	RED	+5V	18AWG	
PJ	1	YELLOW	+12V	22AWG	150mm ±15mm
	2	BLACK	COM	22AWG	
	3	BLACK	COM	22AWG	
	4	RED	+5V	22AWG	

S.ATA HDD
HOUSING: MOLEX 675820000 or equivalent
TERMINAL: MOLEX 675810000 or equivalent

Housing	Pin No.	WIRE COLOR	SIGNAL	WIRE TYPE	LENGTH
PK PM	1	ORANGE	+3V3	18AWG	500mm ±15mm
	2	BLACK	COM	18AWG	
	3	RED	+5V	18AWG	
	4	BLACK	COM	18AWG	
	5	YELLOW	+12V	18AWG	
Housing	Pin No.	WIRE COLOR	SIGNAL	WIRE TYPE	LENGTH
PL PN	1	ORANGE	+3V3	18AWG	150mm ±15mm
	2	BLACK	COM	18AWG	
	3	RED	+5V	18AWG	
	4	BLACK	COM	18AWG	
	5	YELLOW	+12V	18AWG	

6Pins
Connector HOUSING: MOLEX 39-01-0280 or equivalent
TERMINAL: MOLEX 39-00-0060 or equivalent

Housing	Pin No.	WIRE COLOR	SIGNAL	WIRE TYPE	LENGTH
P6	1	YELLOW	+12V	18AWG	500mm ±15mm
	2	YELLOW	+12V	18AWG	
	3	YELLOW	+12V	18AWG	
	4	BLACK	COM	18AWG	
	5	BLACK	COM	18AWG	
	6	BLACK	COM	18AWG	

POWER Module/System Status LED

Name	WIRE COLOR		LED COLOR	WIRE TYPE	LENGTH
PW1LED	BROWN	WHITE	ORANGE	22AWG	900mm ±20mm
PW2LED	RED	WHITE	ORANGE	22AWG	
External LED	GREEN	WHITE	RED/ORANGE	22AWG	

TTL Signal
Connector HOUSING: Molex 22-01-3027 or equivalent

Pin No.	WIRE COLOR	SIGNAL	WIRE TYPE	LENGTH
1	BLACK	COM	22AWG	900mm ±20mm
2	RED	+5V	22AWG	

ALARM Reset Switch Connector

Pin No.	WIRE COLOR	SIGNAL	WIRE TYPE	LENGTH
1	GRAY	COM	22AWG	900mm ±20mm
2	GRAY	REST	22AWG	

一般公差 TOLERANCES: .XXX= .XX= .X=	材料规格 MATERIAL		单位 UNITS	mm	SURE STAR	
	校准者 APPROVE BY	审核者 CHECK BY	绘图者 DRAW BY	图号 DRAW NO		
投影法 PROJECTION: 第三角法			Kevin	张数 SHEET	OF	型号 MODEL NO SS-R2A(9P)
				日期 DATE	2011.11.03	料号 PART NO